Cambridge International AS & A Level

Cambridge Assessment International Education
Cambridge International Advanced Subsidiary and Advanced Level

CANDIDATE NAME

CENTRE NUMBER

CANDIDATE NUMBER

3902398245

PHYSICS **9702/23**

Paper 2 AS Level Structured Questions **May/June 2019**

1 hour 15 minutes

Candidates answer on the Question Paper.

No Additional Materials are required.

READ THESE INSTRUCTIONS FIRST

Write your centre number, candidate number and name on all the work you hand in.
Write in dark blue or black pen.
You may use an HB pencil for any diagrams or graphs.
Do not use staples, paper clips, glue or correction fluid.
DO **NOT** WRITE IN ANY BARCODES.

Answer **all** questions.

Electronic calculators may be used.
You may lose marks if you do not show your working or if you do not use appropriate units.

At the end of the examination, fasten all your work securely together.
The number of marks is given in brackets [ ] at the end of each question or part question.

This document consists of **14** printed pages and **2** blank pages.

DC (ST/CB) 162172/3
© UCLES 2019

Cambridge Assessment International Education

[Turn over

Data

speed of light in free space	$c = 3.00 \times 10^{8}\,\text{m s}^{-1}$
permeability of free space	$\mu_0 = 4\pi \times 10^{-7}\,\text{H m}^{-1}$
permittivity of free space	$\varepsilon_0 = 8.85 \times 10^{-12}\,\text{F m}^{-1}$
	$(\frac{1}{4\pi\varepsilon_0} = 8.99 \times 10^{9}\,\text{m F}^{-1})$
elementary charge	$e = 1.60 \times 10^{-19}\,\text{C}$
the Planck constant	$h = 6.63 \times 10^{-34}\,\text{J s}$
unified atomic mass unit	$1\,\text{u} = 1.66 \times 10^{-27}\,\text{kg}$
rest mass of electron	$m_e = 9.11 \times 10^{-31}\,\text{kg}$
rest mass of proton	$m_p = 1.67 \times 10^{-27}\,\text{kg}$
molar gas constant	$R = 8.31\,\text{J K}^{-1}\,\text{mol}^{-1}$
the Avogadro constant	$N_A = 6.02 \times 10^{23}\,\text{mol}^{-1}$
the Boltzmann constant	$k = 1.38 \times 10^{-23}\,\text{J K}^{-1}$
gravitational constant	$G = 6.67 \times 10^{-11}\,\text{N m}^2\,\text{kg}^{-2}$
acceleration of free fall	$g = 9.81\,\text{m s}^{-2}$

© UCLES 2019

Formulae

uniformly accelerated motion	$s = ut + \frac{1}{2}at^2$ $v^2 = u^2 + 2as$
work done on/by a gas	$W = p\Delta V$
gravitational potential	$\phi = -\frac{Gm}{r}$
hydrostatic pressure	$p = \rho gh$
pressure of an ideal gas	$p = \frac{1}{3}\frac{Nm}{V}\langle c^2 \rangle$
simple harmonic motion	$a = -\omega^2 x$
velocity of particle in s.h.m.	$v = v_0 \cos \omega t$ $v = \pm \omega \sqrt{(x_0^2 - x^2)}$
Doppler effect	$f_o = \frac{f_s v}{v \pm v_s}$
electric potential	$V = \frac{Q}{4\pi\varepsilon_0 r}$
capacitors in series	$1/C = 1/C_1 + 1/C_2 + \ldots$
capacitors in parallel	$C = C_1 + C_2 + \ldots$
energy of charged capacitor	$W = \frac{1}{2}QV$
electric current	$I = Anvq$
resistors in series	$R = R_1 + R_2 + \ldots$
resistors in parallel	$1/R = 1/R_1 + 1/R_2 + \ldots$
Hall voltage	$V_H = \frac{BI}{ntq}$
alternating current/voltage	$x = x_0 \sin \omega t$
radioactive decay	$x = x_0 \exp(-\lambda t)$
decay constant	$\lambda = \frac{0.693}{t_{\frac{1}{2}}}$

© UCLES 2019

[Turn over

BLANK PAGE

© UCLES 2019

Answer **all** the questions in the spaces provided.

1 (a) (i) Define *resistance*.

.....

.....[1]

(ii) A potential difference of 0.60 V is applied across a resistor of resistance 4.0 GΩ.

Calculate the current, in pA, in the resistor.

current = ... pA [2]

(b) The energy E transferred when charge Q moves through an electrical component is given by the equation

$$E = QV$$

where V is the potential difference across the component.

Use the equation to determine the SI base units of potential difference.

SI base units ..... [3]

[Total: 6]

2 **(a)** A resultant force F moves an object of mass m through distance s in a straight line. The force gives the object an acceleration a so that its speed changes from initial speed u to final speed v.

(i) State an expression for:

1. the work W done by the force, in terms of a, m and s

$W =$ ..... [1]

2. the distance s, in terms of a, u and v.

$s =$ ..... [1]

(ii) Use your answers in **(i)** to show that the kinetic energy of the object is given by

$$\text{kinetic energy} = \frac{1}{2} \times \text{mass} \times (\text{speed})^2.$$

Explain your working.

[2]

(b) A ball of mass 0.040 kg is projected into the air from horizontal ground, as illustrated in Fig. 2.1.

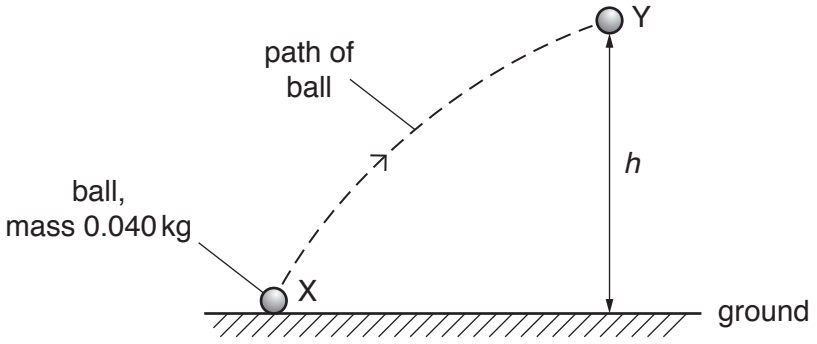

Fig. 2.1

The ball is launched from a point X with a kinetic energy of 4.5 J. At point Y, the ball has a speed of 9.5 m s^{-1}. Air resistance is negligible.

(i) For the movement of the ball from X to Y, draw a solid line on Fig. 2.1 to show:

1. the distance moved (label this line D)

2. the displacement (label this line S).

[2]

(ii) By consideration of energy transfer, determine the height *h* of point Y above the ground.

h = ... m [3]

(iii) On Fig. 2.2, sketch the variation of the kinetic energy of the ball with its vertical height above the ground for the movement of the ball from X to Y.
Numerical values are not required.

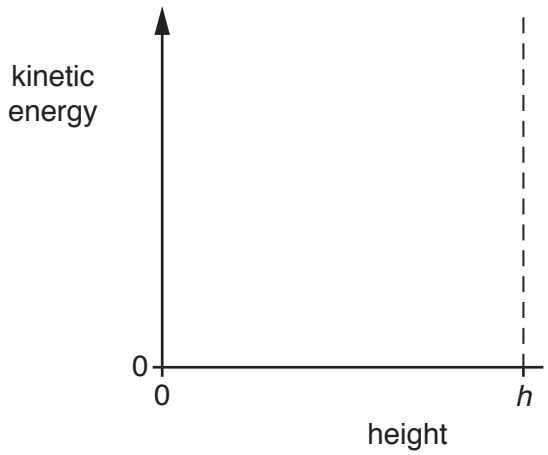

Fig. 2.2

[2]

[Total: 11]

BLANK PAGE

© UCLES 2019

3 A cylindrical disc of mass 0.24 kg has a circular cross-sectional area A, as shown in Fig. 3.1.

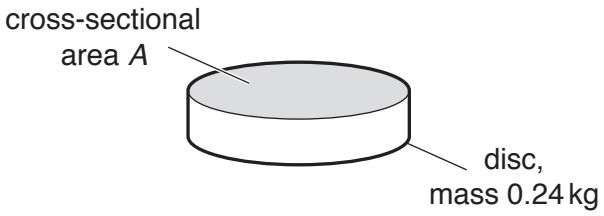

Fig. 3.1

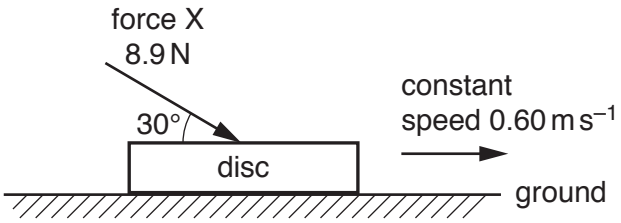

Fig. 3.2

The disc is on horizontal ground, as shown in Fig. 3.2. A force X of magnitude 8.9 N acts on the disc in a direction of 30° to the horizontal. The disc moves at a constant speed of 0.60 m s^{-1} along the ground.

(a) Determine the rate of doing work on the disc by the force X.

rate of doing work = ... W [2]

(b) The force X and the weight of the disc exert a combined pressure on the ground of 3500 Pa.

Calculate the cross-sectional area A of the disc.

A = ... m^2 [3]

(c) Newton's third law describes how forces exist in pairs. One such pair of forces is the weight of the disc and another force Y. State:

(i) the direction of force Y

.....[1]

(ii) the name of the body on which force Y acts.

.....[1]

[Total: 7]

© UCLES 2019

4 Two vertical metal plates in a vacuum are separated by a distance of 0.12 m. Fig. 4.1 shows a side view of this arrangement.

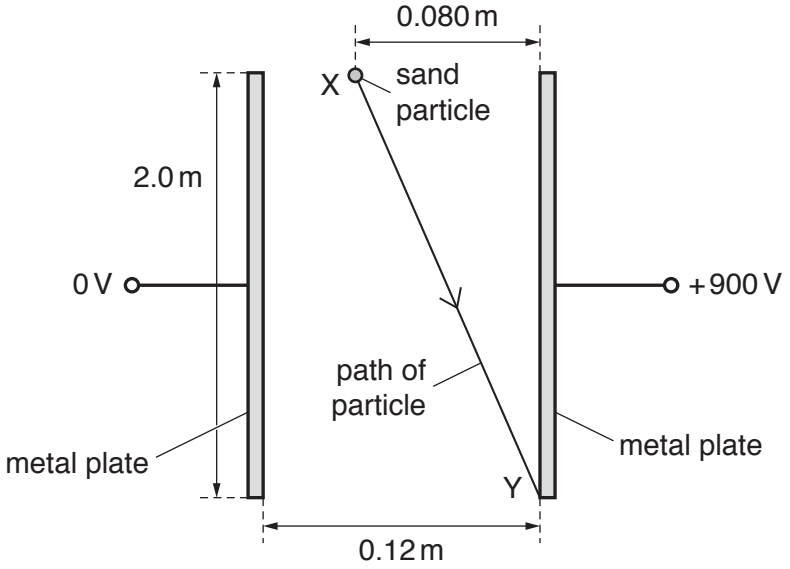

Fig. 4.1 (not to scale)

Each plate has a length of 2.0 m. The potential difference between the plates is 900 V. The electric field between the plates is uniform.

A negatively charged sand particle is released from rest at point X, which is a horizontal distance of 0.080 m from the top of the positively charged plate. The particle then travels in a straight line and collides with the positively charged plate at its lowest point Y, as illustrated in Fig. 4.1.

(a) Describe the pattern of the field lines (lines of force) between the plates.

.....

.....

.....[2]

(b) State the names of the **two** forces acting on the particle as it moves from X to Y.

.....[1]

(c) By considering the vertical motion of the sand particle, show that the time taken for the particle to move from X to Y is 0.64 s.

[2]

© UCLES 2019

(d) Calculate the horizontal component of the acceleration of the particle.

horizontal component of acceleration = ... $m\,s^{-2}$ [2]

(e) **(i)** Calculate the magnitude of the electric field strength.

electric field strength = ... $N\,C^{-1}$ [2]

(ii) The sand particle has mass m and charge q. Use your answers in **(d)** and **(e)(i)** to determine the ratio $\frac{q}{m}$.

ratio = ... $C\,kg^{-1}$ [2]

(f) Another particle has a smaller magnitude of the ratio $\frac{q}{m}$ than the sand particle. This particle is also released from point X.

For the movement of this particle, state the effect, if any, of the decreased magnitude of the ratio on:

(i) the vertical component of the acceleration

.....[1]

(ii) the horizontal component of the acceleration.

.....[1]

[Total: 13]

5 A vertical tube of length 0.60 m is open at both ends, as shown in Fig. 5.1.

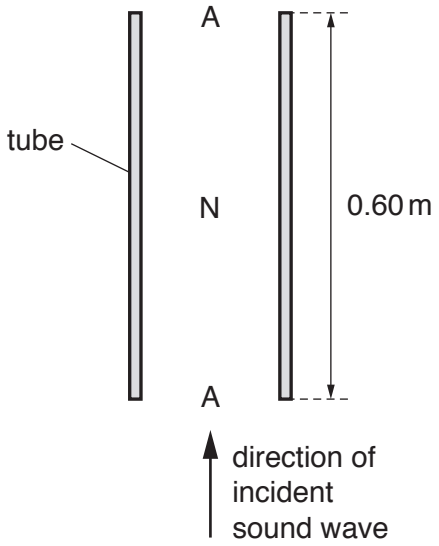

Fig. 5.1

An incident sinusoidal sound wave of a single frequency travels up the tube. A stationary wave is then formed in the air column in the tube with antinodes A at both ends and a node N at the midpoint.

(a) Explain how the stationary wave is formed from the incident sound wave.

.....

.....

.....

.....[2]

(b) On Fig. 5.2, sketch a graph to show the variation of the amplitude of the stationary wave with height *h* above the bottom of the tube.

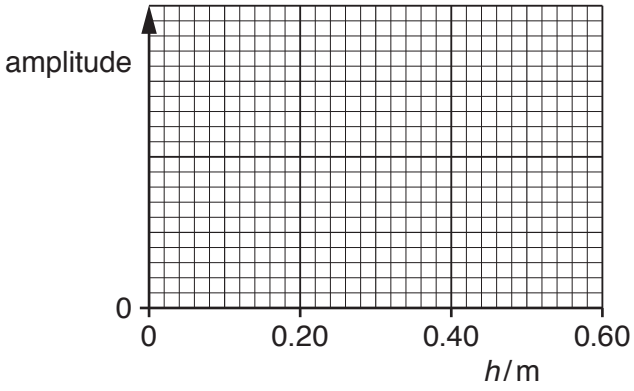

Fig. 5.2

[2]

(c) For the stationary wave, state:

(i) the direction of the oscillations of an air particle at a height of 0.15 m above the bottom of the tube

.....[1]

(ii) the phase difference between the oscillations of a particle at a height of 0.10 m and a particle at a height of 0.20 m above the bottom of the tube.

phase difference = ... ° [1]

(d) The speed of the sound wave is 340 m s^{-1}.

Calculate the frequency of the sound wave.

frequency = ... Hz [2]

(e) The frequency of the sound wave is gradually increased.

Determine the frequency of the wave when a stationary wave is next formed.

frequency = ... Hz [1]

[Total: 9]

© UCLES 2019

[Turn over

6 **(a)** Define the *ohm*.

.....[1]

(b) A battery of electromotive force (e.m.f.) E and internal resistance 1.5 Ω is connected to a network of resistors, as shown in Fig. 6.1.

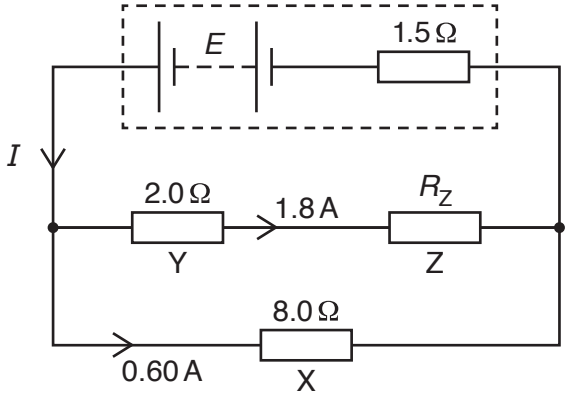

Fig. 6.1

Resistor X has a resistance of 8.0 Ω. Resistor Y has a resistance of 2.0 Ω. Resistor Z has a resistance of R_Z. The current in X is 0.60 A and the current in Y is 1.8 A.

(i) Calculate:

1. the current I in the battery

I = ... A [1]

2. resistance R_Z

R_Z = ... Ω [2]

3. e.m.f. E.

E = ... V [2]

© UCLES 2019

(ii) Resistors X and Y are each made of wire. The two wires have the same length and are made of the same metal.

Determine the ratio:

1. $\dfrac{\text{cross-sectional area of wire X}}{\text{cross-sectional area of wire Y}}$

ratio = ... [2]

2. $\dfrac{\text{average drift speed of free electrons in X}}{\text{average drift speed of free electrons in Y}}$.

ratio = ... [2]

[Total: 10]

Please turn over for Question 7.

7 A sample of a radioactive substance may decay by the emission of either α-radiation or β-radiation and/or γ-radiation.

State the type of radiation, one in each case, that:

(a) consists of leptons

.....[1]

(b) contains quarks

.....[1]

(c) cannot be deflected by an electric field

.....[1]

(d) has a continuous range of energies, rather than discrete values of energy.

.....[1]

[Total: 4]

Permission to reproduce items where third-party owned material protected by copyright is included has been sought and cleared where possible. Every reasonable effort has been made by the publisher (UCLES) to trace copyright holders, but if any items requiring clearance have unwittingly been included, the publisher will be pleased to make amends at the earliest possible opportunity.

To avoid the issue of disclosure of answer-related information to candidates, all copyright acknowledgements are reproduced online in the Cambridge Assessment International Education Copyright Acknowledgements Booklet. This is produced for each series of examinations and is freely available to download at www.cambridgeinternational.org after the live examination series.

Cambridge Assessment International Education is part of the Cambridge Assessment Group. Cambridge Assessment is the brand name of the University of Cambridge Local Examinations Syndicate (UCLES), which itself is a department of the University of Cambridge.